Design/System/Construction/Assembly Usage Disclaimer

- Authorities Having Jurisdiction should be consulted in all cases as to the particular requirements covering the installation and use of UL Certified products, equipment, system, devices, and materials.
- Authorities Having Jurisdiction should be consulted before construction.
- Fire resistance assemblies and products are developed by the design submitter and have been investigated by UL for compliance with applicable requirements. The published information cannot always address every construction nuance encountered in the field.
- When field issues arise, it is recommended the first contact for assistance be the technical service staff provided by the product manufacturer noted for the design. Users of fire resistance assemblies are advised to consult the general Guide Information for each product category and each group of assemblies. The Guide Information includes specifics concerning alternate materials and alternate methods of construction.
- Only products which bear UL's Mark are considered Certified.

Roof Deck Constructions

See General Information for Roof Deck Constructions

Construction No. 467

November 30, 2022

Uplift — Class 90 or 60 (See Item No. 1)
Fire Not Investigated

Cookies on UL Solutions
We use cookies to personalize content and ads, to provide social media features and to analyze our traffic. We also share information about your use of our site with our social media, advertising and analytics partners. Learn more

Cookies Settings | Reject All | Accept All Cookies

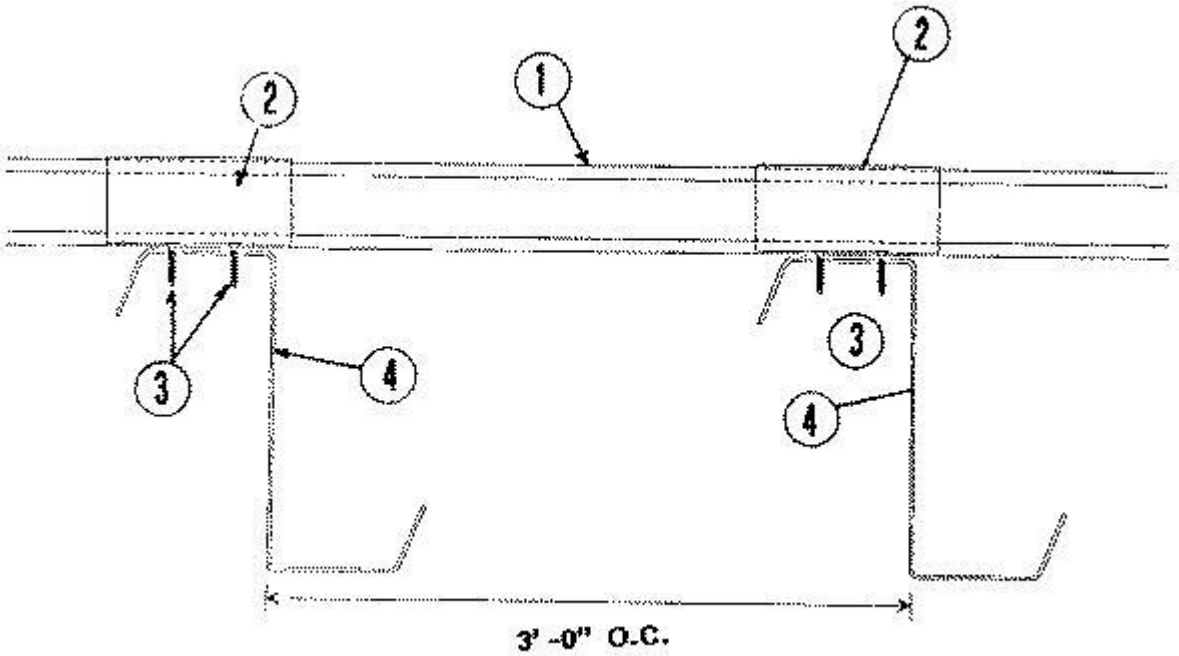

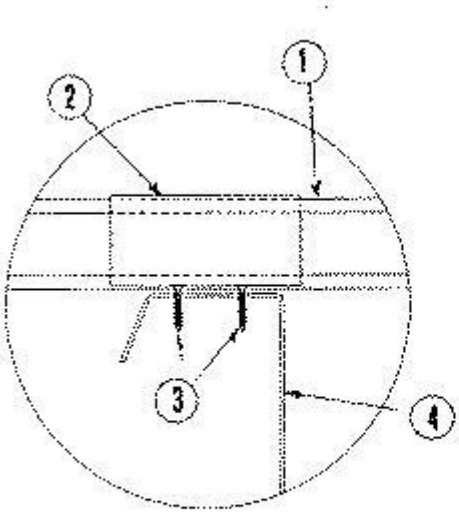

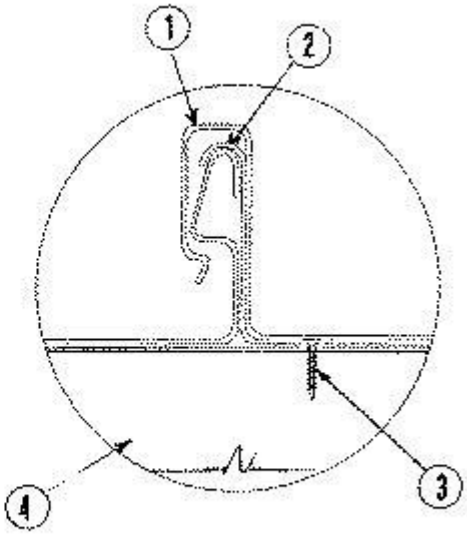

1. **Metal Roof Deck Panels* —** No. 24 MSG thick coated steel; for Class 90, 18 in. wide, for Class 60, 19-1/2 in. wide. Female rib 1-1/2 in. high, male rib, 1-3/8 in. high. Ribs formed to snap together. Panels continuous over two or more spans with no end-laps. A bead of sealant may be used at side ribs.
BOBBY JAMES ROOFING AND CO, LLC (View Classification) — "BJI 550"

DREXEL METALS, INC. (View Classification) — "Met-Fab 550"

Cookies on UL Solutions

We use cookies to personalize content and ads, to provide social media features and to analyze our traffic. We also share information about your use of our site with our social media, advertising and analytics partners. Learn more

SHEFFIELD METALS INTERNATIONAL (View Classification) — "CR-150-SL"
STREAMLINE ROOFING & CONSTRUCTION INC (View Classification) — "150SL"

2. **Roof Deck Fasteners* —** (Panel Clips) — One piece assembly, 4 in. long with a 1-3/8 in. high leg formed to engage the male side of the panel. Fabricated from 0.034 in. thick stainless steel.

DREXEL METALS, INC. (View Classification) — "Met-Fab 550"

3. **Fasteners (Screws) —** Fasteners used to attach panel clips to purlins to be No. 10-16 by 1 in. long self-drilling, self-tapping, No. 2 Phillips drive, wafer-head plated steel screws. Two fasteners used per clip inserted through 3/16 in. diam guide holes in clip base.

4. **Purlins —** No. 16 MSG min steel (50,000 psi min yield strength). Spacing to be 3 ft OC.
Refer to General Information, Roof Deck Constructions (Roofing Materials and System Directory) for items not evaluated.

*** Indicates such products shall bear the UL or cUL Certification Mark for jurisdictions employing the UL or cUL Certification (such as Canada), respectively.**

Last Updated on 2022-11-30

The appearance of a company's name or product in this database does not in itself assure that products so identified have been manufactured under UL Solutions' Follow - Up Service. Only those products bearing the UL Mark should be considered to be Certified and covered under UL Solutions' Follow - Up Service. Always look for the Mark on the product.

UL Solutions permits the reproduction of the material contained in Product iQ subject to the following conditions: 1. The Guide Information, Assemblies, Constructions, Designs, Systems, and/or Certifications (files) must be presented in their entirety and in a non-misleading manner, without any manipulation of the data (or drawings). 2. The statement "Reprinted from Product iQ with permission from UL Solutions" must appear adjacent to the extracted material. In addition, the reprinted material must include a copyright notice in the following format: "©2023 UL LLC."

Cookies on UL Solutions

We use cookies to personalize content and ads, to provide social media features and to analyze our traffic. We also share information about your use of our site with our social media, advertising and analytics partners. Learn more